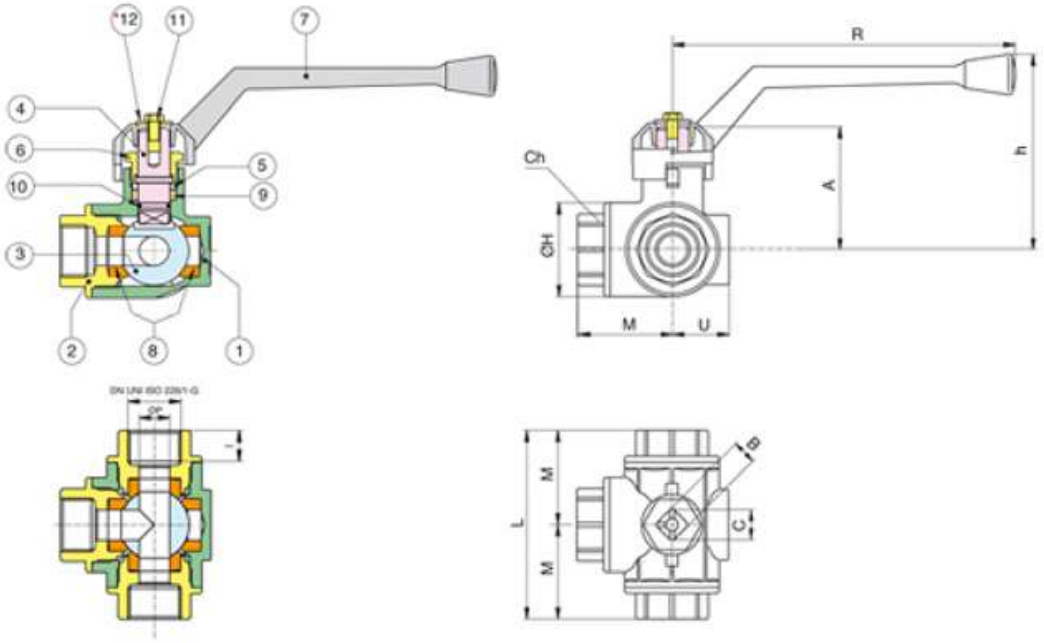

MISURA	DN	P	I	L	M	CH	R	h	U	A	B	C	H	Kv	PN	Kg
1/4"	8	11	12.5	80.5	40.2	22	134	77.5	23	50	8.2	11	39	2.8	40	0.77
3/8"	10	11	12.5	80.5	40.2	22	134	77.5	23	50	8.2	11	39	3	40	0.73
1/2"	15	11	14	80.5	40.2	31	134	77.5	23	50	8.2	11	39	3.6	40	0.76
3/4"	20	15	14	93.4	46.7	34	170	94	28	60	12	15.5	47	6	40	1.25
1"	25	20	17	107.3	53.6	41	205	107	31.5	72	14	18	54	11	25	1.91
1"1/4	32	25	19	118	59	50	205	111	35.5	77	14	18	66	16	16	2.61
1"1/2	40	32	23	141	70.5	57	205	117.5	43.5	83	14	18	80	25.5	16	4.05
2"	50	40	27	164	82	70	260	132	48.5	107	20	25	95	37.5	16	6.60