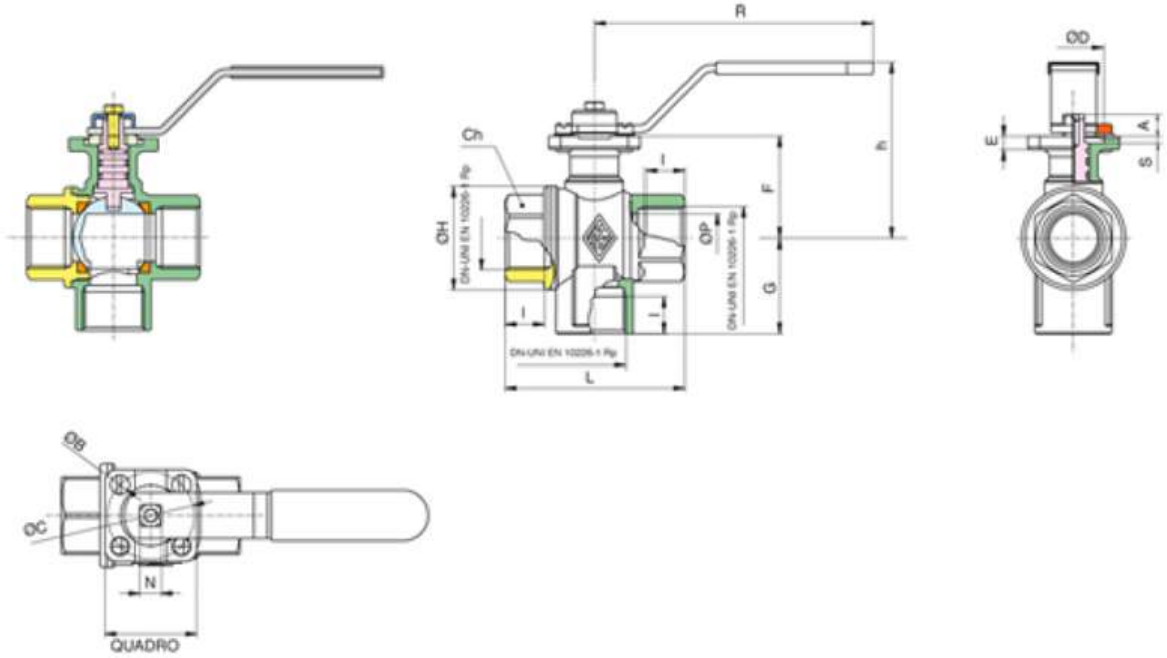

MISURA	DN	P	I	CH	A	B	C	D	S	E	F	G	N	Kv	PN	Kg
1/4"	8	10	11	22	9	M7	36	25	2	5.5	28.5	26	9	2.8	40	0.77
3/8"	10	10	11.4	22	9	M7	36	25	2	5.5	28.5	26	9	3	40	0.73
1/2"	15	15	15	27	9	M7	36	25	2	5.5	31	33.5	9	3.6	40	0.76
3/4"	20	20	16.3	32	9	M7	36	25	3	5.5	42	39.5	9	6	40	1.25
1"	25	25	19.1	41	9	M7	36	25	3	6	45	47	9	11	25	1.91